TANIX

professional signage solutions

www.tanix.be

20 W LED FLOOD LIGHT 002
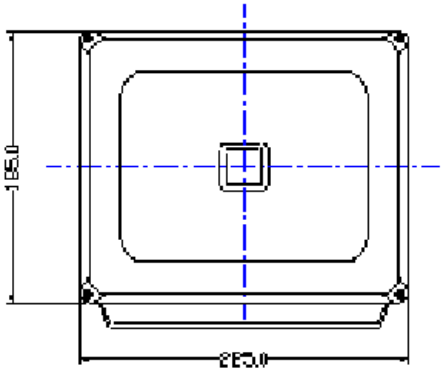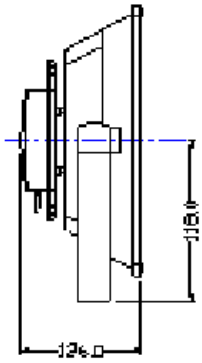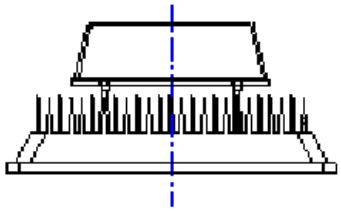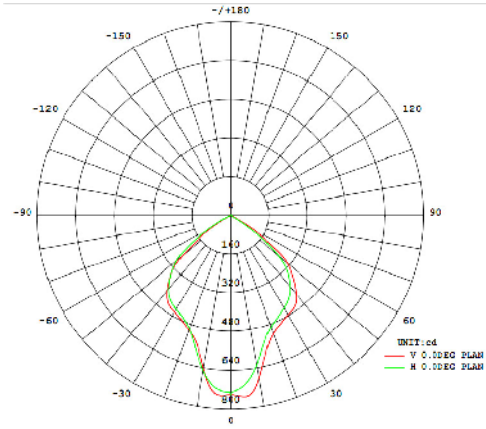
Inpmut Voltage		AC85V ~ 265V
Frequency Range		50Hz ~ 60Hz
Total harmonic Distortion		≤ 9%
Power Factor		> 0.98
Power efficiency		> 85%
LED Working Voltage		DC30 ~ 36V
LED		1 piece
LED Consumption		18 W
System Consumption		23 W
LED Luminous Efficiency		74 Lm / W
Initiial flux		1400 Lm
Lamp's Efficiency		> 85%
Average Illuminance	4 m	19.12 Lux
	6 m	8.496 Lux
	8 m	4.779 Lux
Illuminance Area	4 m	7 x 7 m
	6 m	10 x 10 m
	8 m	14 x 17 m
Illuminance Uniformity		> 0.6
Color Temperature	WW	2700°K ~ 3900°K
	PW	3900°K ~ 6000°K
	CW	6000°K ~ 7000°K
Color Rendering Index		Ra > 75
Junction Temperature		≤ 80° C
Working Temperature		-40° C ~ +55° C
Storage Temperature		-25° C ~ +65° C
IP Grade		IP65
Working Life Span		50.000 H
Power Line		0.75 mm²
	Brown	L
Connect Wire	Blue	N
	Yellow/Green	G